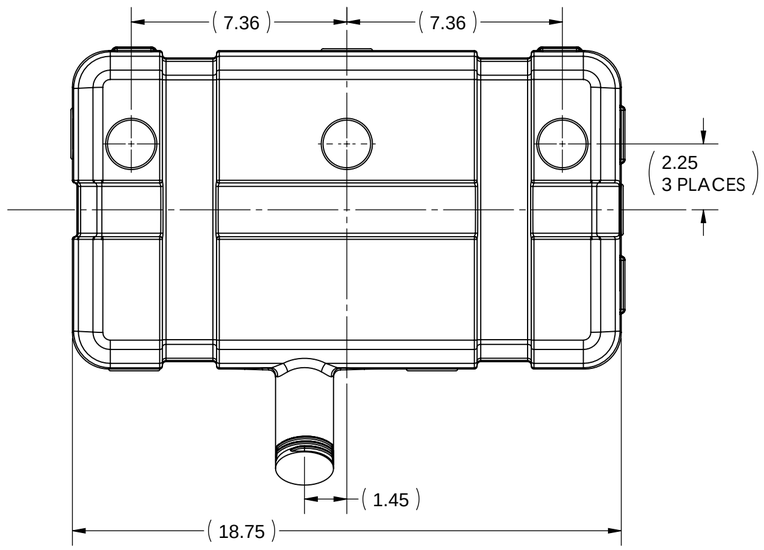

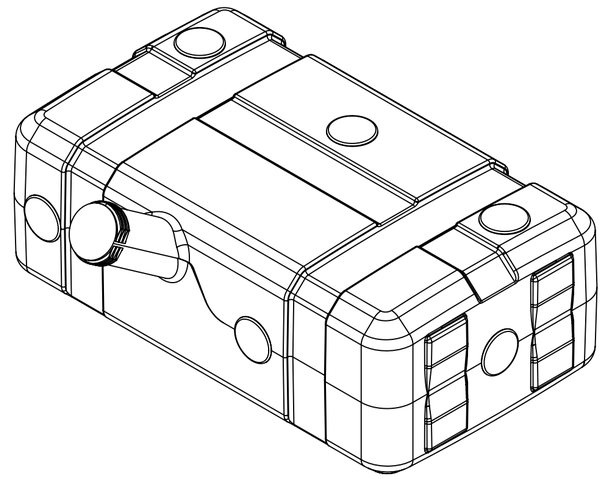

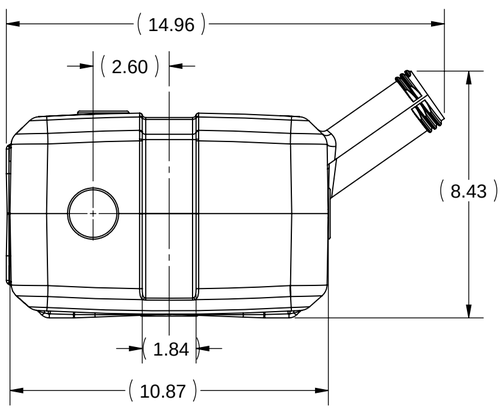

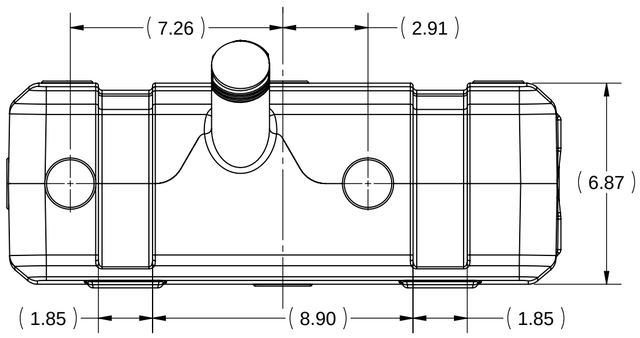

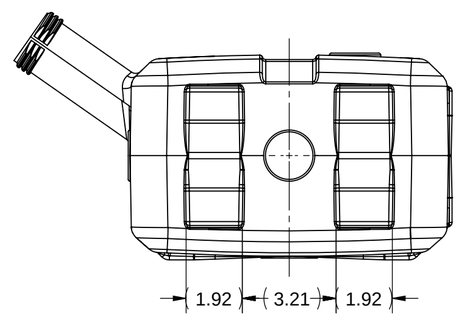

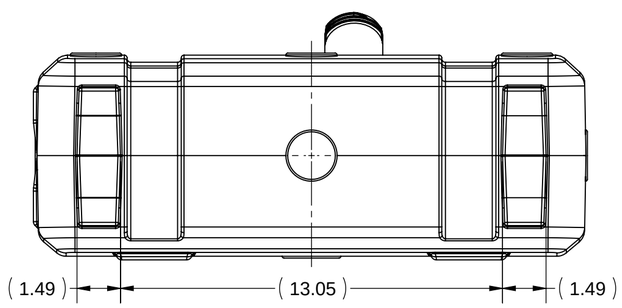

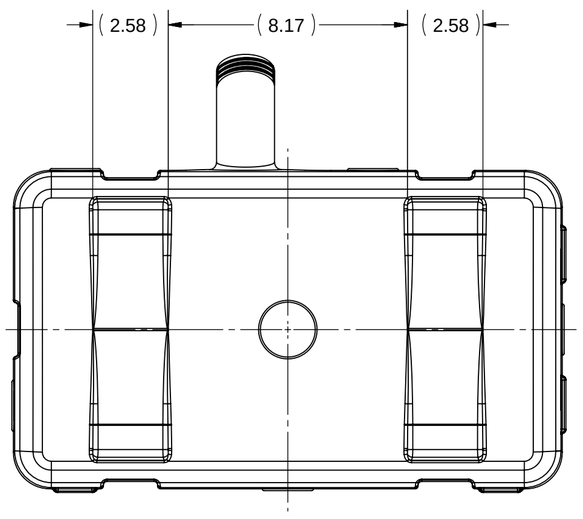

Notes
1. MATERIAL: PE235 per ASTM D 4976-04a
2. COLOR: BLACK
3. CORNER WALL THICKNESS: 0.060" MIN
4. THREADS: 2-1/4" MODIFIED BUTTRESS

REV	ECR	DESCRIPTION	DATE	BY	APR
A	NPN	Released for Production	2-2-10	RDL	BS

REVISIONS

PROPRIETARY AND CONFIDENTIAL
THE INFORMATION CONTAINED IN THIS DRAWING IS THE SOLE PROPERTY OF FLAMBEAU, INC. ANY REPRODUCTION IN PART OR AS A WHOLE WITHOUT THE WRITTEN PERMISSION OF FLAMBEAU, INC. IS PROHIBITED.

DIMENSIONS ARE IN INCHES
TOLERANCES:
FRACTIONAL ±1/64"
ANGULAR: MACH ±1⅊
TWO PLACE DECIMAL ±.010"
THREE PLACE DECIMAL ±.005"
FOUR PLACE DECIMAL ±.001"

SHT 1 OF 1

FLAMBEAU, INC.
911 LYNN AVENUE BARABOO, WI 53913 PH.(608)356-5551

Scale: 1:4	BFI No: 235	Drawn By: RDL	Date: 1-28-10
Mat'l: See Notes	Mold No: 5337	FPN: **070621AE**	

Description:
5 Gallon Tank, Low Profile, Center Neck

Customer: **Flambeau Fluid Sustems**

Dwg No: **070621AE**