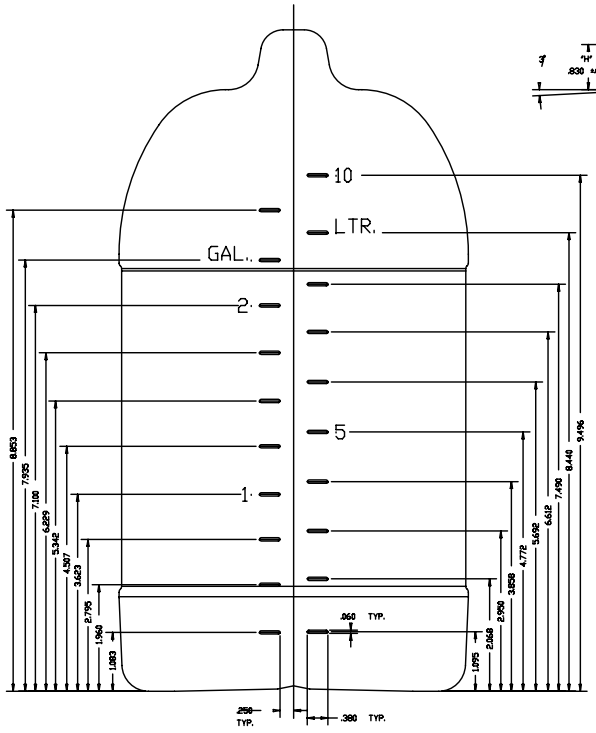

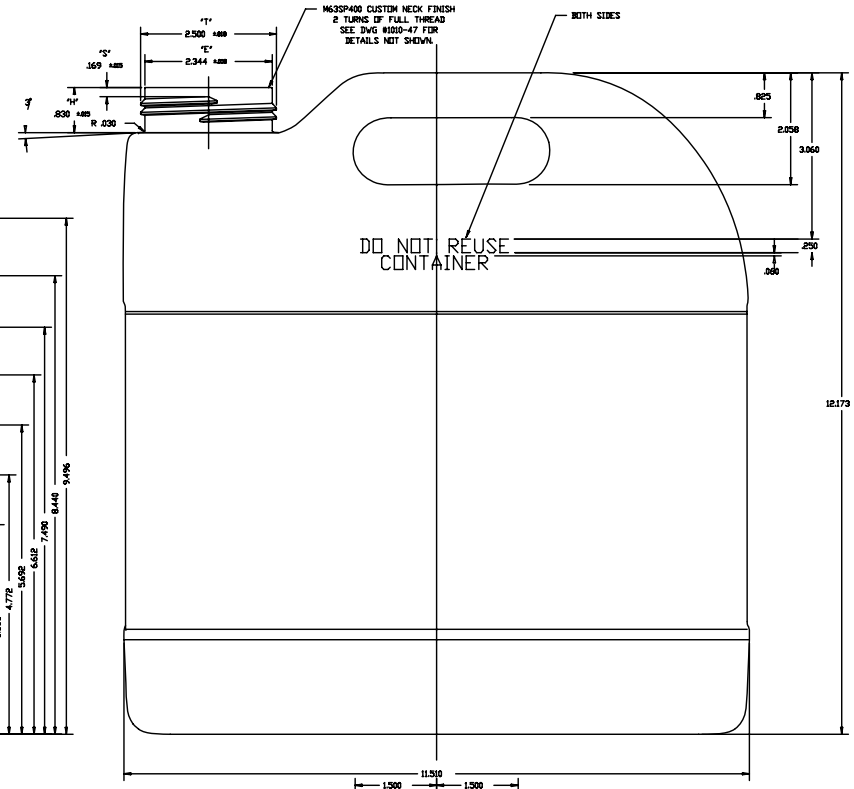

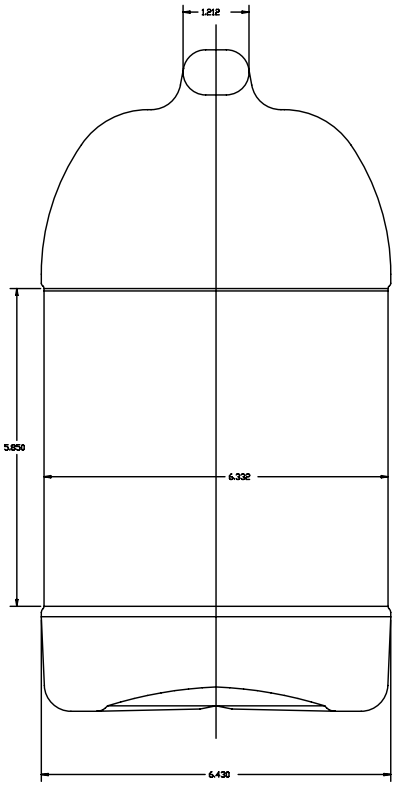

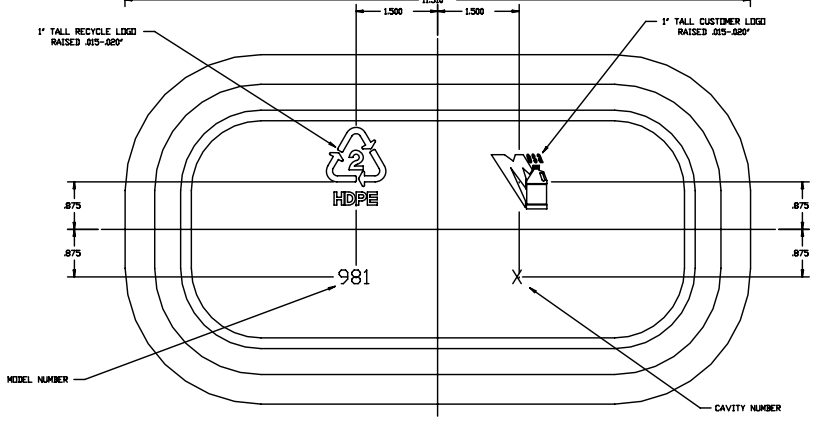

NOTES:

1. CONTAINER WEIGHT -- 387g
2. MATERIAL -- HDPE
3. FILL CAPACITY -- 2.5 GALLON / 10 LITER
4. TOLERANCES UNLESS SPECIFIED:

   VERTICAL ± .090"
   HORIZONTAL ± .120"

5. BOTTLES TO BE CHECKED AGED WITH 20°C WATER

ALL ENGRAVED TEXT TO BE
1/4" TALL RAISED .015-.020"
UNLESS OTHERWISE NOTED.

CONFIDENTIAL

Property of MESA INDUSTRIES, INC.

These prints and drawings are the property of this company, as the contents and disclosures of these prints and drawings are confidential and are for the exclusive use of those to whom they are sent. Any violation for any purpose, particularly the use of prints for duplicating the layout, will be prosecuted under all remedies provided by law.

REV.	DESCRIPTION	BY	DATE	CHK'D

PROPERTY OF UNILOY-MILACRON,INC.	DRAWN Brad Caszatt	DATE 10FEB02	PLASTICS DIVISION WINCHESTER MICHIGAN
	CHECKED Don Ankney	DATE 11FEB02	
	SCALE FULL	DESCRIPTION PRODUCT DRAWING	
UNILOY-MILACRON,INC.NOT TO BE REPRO-	REFERENCE MATERIAL 981-2	MESA - 2.5 GALLON "F" STYLE	
CONSENT OF UNILOY-MILACRON,INC.	CUSTOMER SAMPLE	DWG NO. D-981-46	REV.