ACCESSORIES					
MK	SIZE	DESCRIPTION	DEG	ELEV	DOME

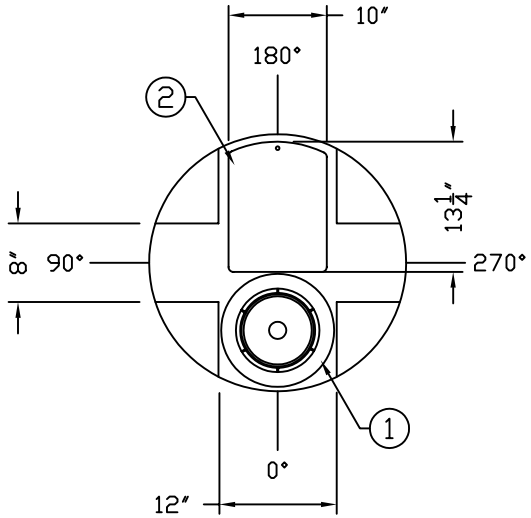

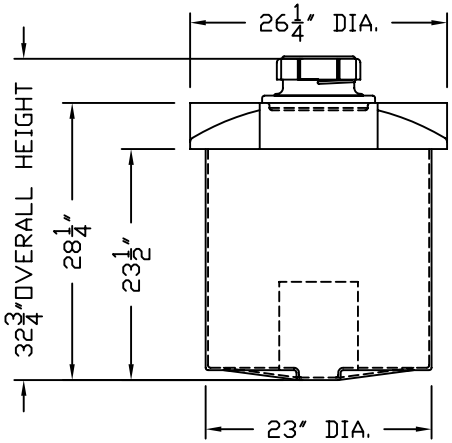

NOTES:
1 7″ ACCESS W/ THREADED LID AND RIM
2 MOLDED IN PUMP SHELF
3 PRIMARY CALCULATED GALLONS PER INCH: 1.743 GPI
4 CALCULATED STRAIGHT SIDE CAPACITY: 38.781 GAL.
5 SECONDARY CALCULATED GALLONS PER INCH: 2.257 GPI
6 CALCULATED STRAIGHT SIDE CAPACITY: 50.783 GAL.

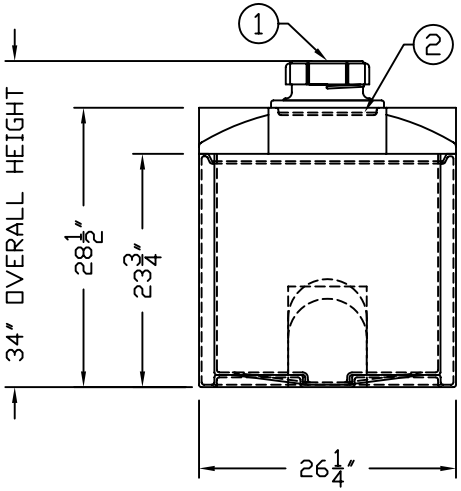

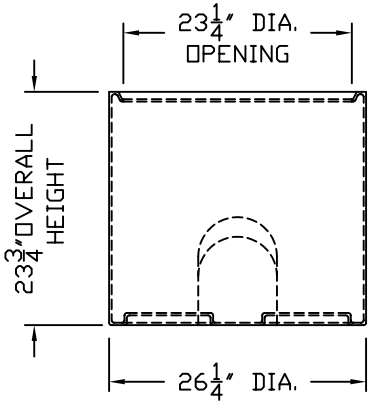

REV	REVISION DESCRIPTION	REV DATE
A	TURNED THE TANK 180° SO THE ACCESS IS AT 0°	6/11/08 MG

Aomann CORPORATION OF AMERICA
300 N TAYLOR ROAD
GARRETT, IN 46738
PHONE: (260) 357-3181
FAX: (260) 357-3738

CUSTOMER APPROVAL

OVERALL TANK WEIGHT – LBS.

PRIMARY VESSEL	SPECIFIC GRAVITY – SP.G. MAX	SECONDARY VESSEL	SPECIFIC GRAVITY – SP.G. MAX
RESIN USED: – – POLYETHYLENE	TANK WEIGHT – LBS.	RESIN USED: – – POLYETHYLENE	TANK WEIGHT – LBS.
	TANK COLOR –		TANK COLOR –

TITLE IMT 40 GAL.
DOUBLE WALL STORAGE TANK
–

DRAWN BY: D. MYERS
DRAWN DATE: 10/22/03
DWG NUMBER: IMT 40
REV A

ALL DIMENSIONS ARE IN INCHES AND ARE ±3%